Ship loose items:
None

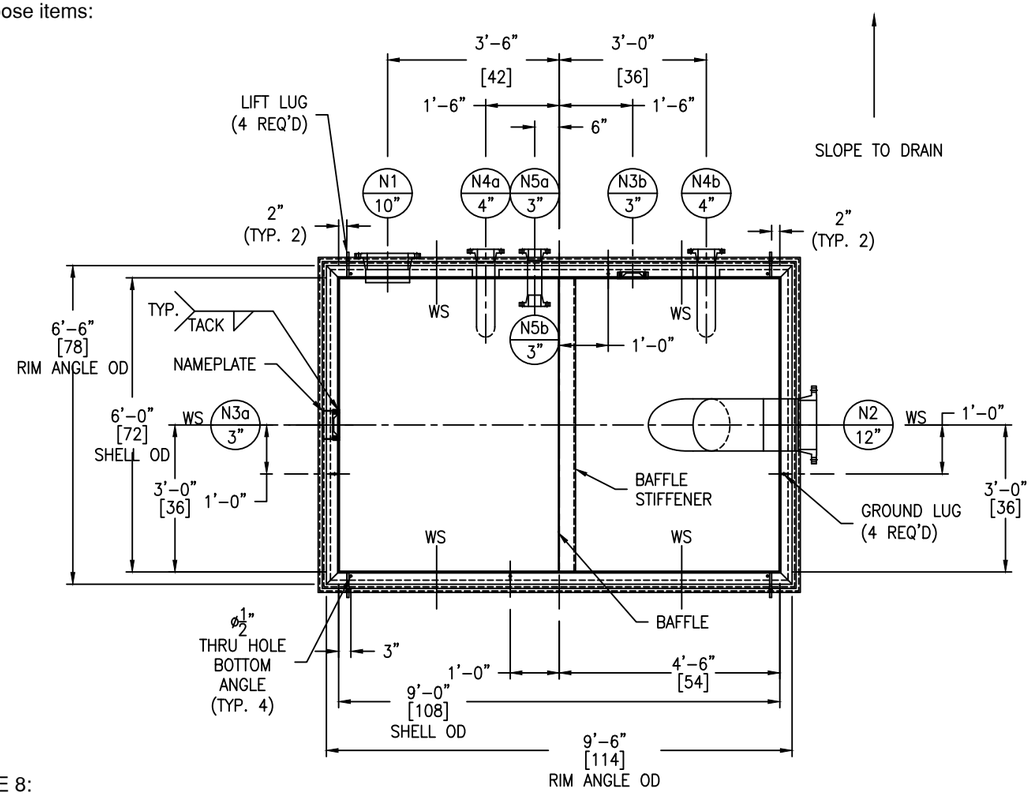

*NOTE 8:
SPOT X-RAY FOR N2 & N3a on LONG SEAM PER CODE.

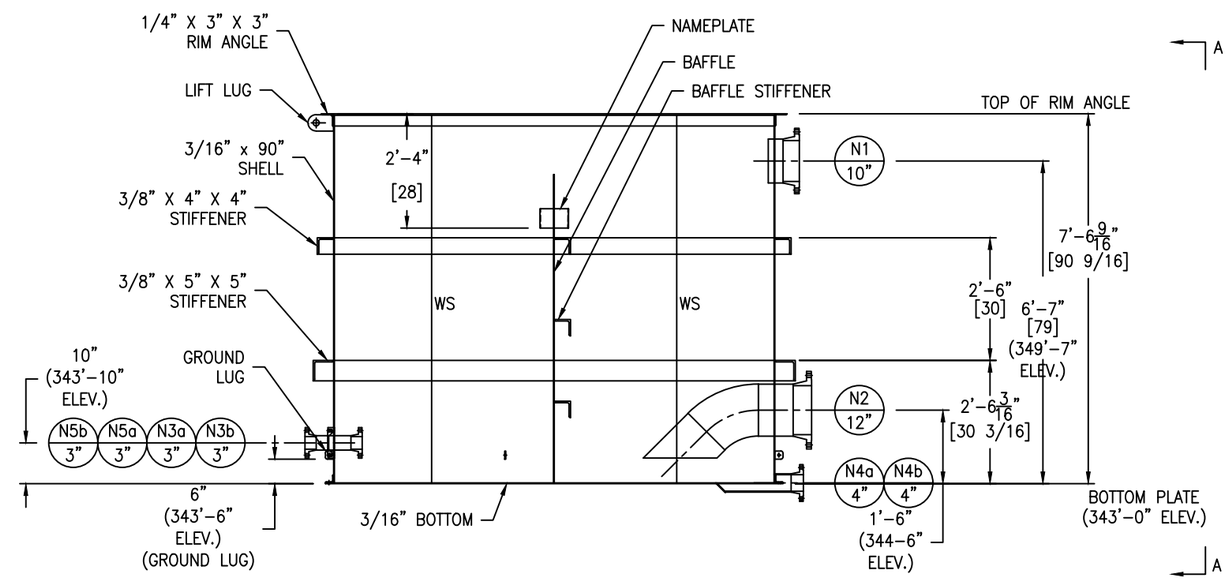

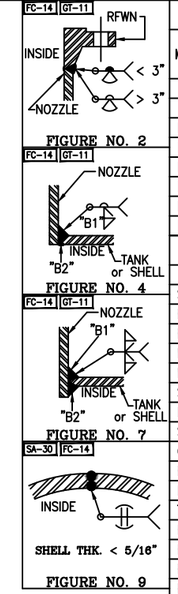

NOZZLE SCHEDULE

MARK	SERVICE	SIZE	RATING	TYPE / STYLE	NECK SCHED.	PROJECTION EXT. (℄)	PROJECTION INT. (MIN.)	WELD FIGURE	REPAD SIZE (WIDTH X THK.)	WELD SIZE "A1"	"A2"	"B1"	"B2"	"C1"	"C2"
N1	OVERFLOW	10"	150#	RFWN	40	6"	1"	2,7	–	–	–	3/16	3/16	–	–
N2	PUMP SUCTION	12"	150#	RFWN	40S	SEE DWG	SEE DWG	2,7	–	–	–	3/16	3/16	–	–
N3a	LEVEL TRANSMITTER	3"	–	SPECIAL STUD PAD	–	–	–	4	–	–	–	3/16	1/8	–	–
N3b	LEVEL TRANSMITTER	3"	–	SPECIAL STUD PAD	–	–	–	4	–	–	–	3/16	1/8	–	–
N4a	DRAIN	4"	150#	RFWN	40	SEE DWG	–	2	–	–	–	3/16	1/8	–	–
N4b	DRAIN	4"	150#	RFWN	40	SEE DWG	–	2	–	–	–	3/16	1/8	–	–
N5a	RECIRC	3"	150#	RFWN	40	SEE DWG	SEE DWG	2,7	–	–	–	3/16	3/16	–	–
N5b	RECIRC	3"	150#	RFWN	40	SEE DWG	SEE DWG	2,7	–	–	–	3/16	3/16	–	–

MATERIALS OF CONSTRUCTION

	VESSEL
SHELL	SA240-304/304L
BOTTOM	SA240-304/304L
RIM ANGLE	SA479-304/304L
NOZZLE NECKS	SA403-304/304L WPW & SA312-304/304L WLD
NOZZLE FLANGES	SA182F-304/304L
STUDPAD	SA182F-304/304L
LIFTING LUGS	SA240-304/304L
STIFFENER	SA479-304/304L
GROUND LUG	SA240-304/304L
BAFFLE	SA240-304/304L
LADDER	–
TANK CLIPS (LADDER)	–
HANDRAIL	–
HANDRAIL CLIPS	–
PLATFORM	–
PLATFORM CLIPS	–
DIPTUBE SUPPORT	–
JACKET SHELL	–

DESIGN DATA

	VESSEL
DESIGN AND FAB. CODE	API 650
CERT. STAMP REQ'D.	YES
DESIGN PRESSURE	ATM
DESIGN TEMPERATURE	150° F
MIN. DESIGN METAL TEMP.	-20° F @ ATM
OPERATING PRESSURE	ATM
OPERATING TEMPERATURE	MIN. 104° F / MAX. 122° F
JOINT EFFICIENCY HEADS	0.70
JOINT EFFICIENCY SHELL	0.70
CORROSION ALLOWANCE	0"
SPECIFIC GRAVITY	1.02
EARTHQUAKE ZONE	Ss (0.157) S1 (0.08)
WIND LOAD	INDOOR
STRESS RELIEF	NOT REQ'D
RADIOGRAPHIC EXAM	SPOT (PER CUSTOMER) SEE NOTE 8
DYE PENETRANT EXAM	SEE NOTE 7
MAGNETIC PARTICLE EXAM	NOT REQ'D
HYDROSTATIC TEST	FILL WITH WATER

VESSEL FINISH

INTERIOR WELD TREATMENT:	SAV TANK STANDARD
EXTERIOR WELD TREATMENT:	SAV TANK STANDARD
SAV TANK FINISHING STANDARD:	SEE NOTE 6
INSULATION:	N/A
PAINTING:	N/A

VESSEL CAPACITY AND WEIGHTS

OPERATING CAPACITY	–
FULL CAPACITY	3,000 GAL.
EMPTY SHIPPING WEIGHT	4,500 LBS.
WEIGHT FULL OF WATER	29,700 LBS.
WEIGHT FULL OF PRODUCT	30,200 LBS.

NOZZLES AND OTHER ATTACHEMENTS ARE NOT SHOWN FOR CLARITY.

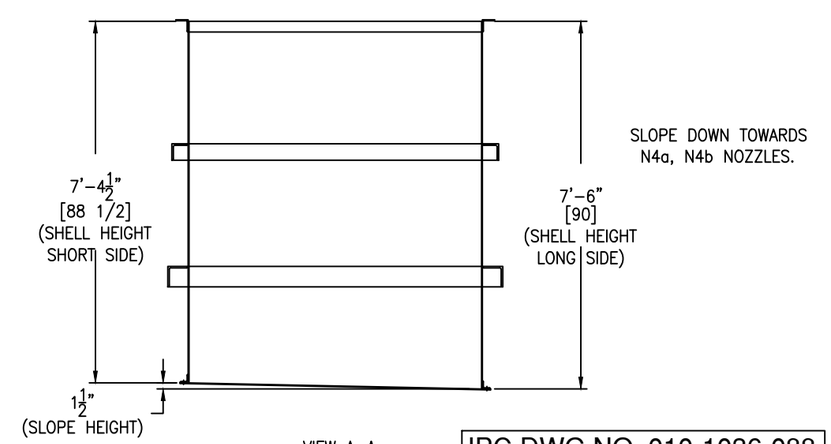

VIEW A-A

IPC DWG NO. 010-1036-088

QUALITY CONTROL

ENG. _____ DATE: _____

Q.C. _____ DATE: _____

This drawing is issued for customer approval. please review, make approval changes (if any) in red. check the appropriate box, sign & date.

- ☐ Approval – no changes. Please proceed with fabrication.
- ☐ Approved as noted. Please proceed with fabrication
- ☐ Not approved. Please make changes and resubmit.

Customer signature _____ Date _____

GENERAL NOTES

1.) COVER ALL FLANGES, OPENINGS & MACHINED SURFACES PRIOR TO SHIPMENT UNLESS OTHERWISE NOTED.
2.) BOLT HOLES TO STRADDLE 0° & 180° UNLESS OTHERWISE NOTED.
3.) NOZZLE REPADS TO HAVE (1) ø1/4" TELL-TALE HOLES ON HORIZONTAL CENTER LINE.
ALL OTHER REPADS TO HAVE (1) ø1/4" WEEP HOLE AT LOWEST POINT ON PAD.
4.) MANUFACTURING TOLERANCE TO BE IN ACCORDANCE WITH API STANDARD 650 7.5.
5.) ASME MATERIALS TO CONFORM TO THE FOLLOWING: FLANGES – B16.5, FITTINGS – B16.9 & COUPLINGS – B16.11.
6.) PICKLE ALL EXTERIOR WELDS. PASSIVATE INTERIOR & EXTERIOR OF VESSEL.
7.) DYE PEN – SHELL TO BOTTOM SEAM & ALL SHELL NOZZLES
8.) SPOT X-RAY FOR N2 & N3a & LONG SEAM PER CODE.

REVISIONS

REV	D.BY	C.BY	DATE	DESCRIPTION
				AS BUILT
2	AD	–	5/22/25	CERTIFIED
1	RS	NP	4/10/25	APPROVAL REV 1
0	RS	AD	3/4/25	APPROVAL

Savannah Tank & Equipment Corp.
1517 Telfair Road, Savannah, GA 31415
(912) 233-8902

DRAWN BY: RS
CHK'D BY: AD
APPROVED BY: NP
SCALE: 1/2" = 1'-0"

IRVING
FORMING SEAL PIT
EQUIP. #010-1036-TAN-002-00
CUST. PO #20615990

DRAWING NO.: 035-25-1 SHT 1 OF 2 REV. SET 2

FC-14

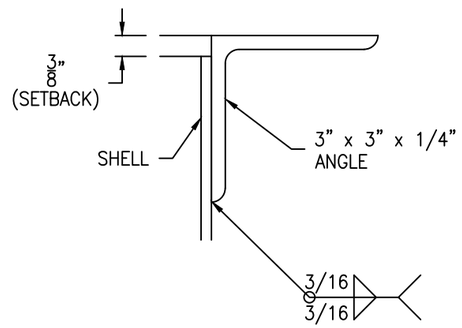

RIM ANGLE DETAIL

SCALE: 6" = 1'-0"

FC-14

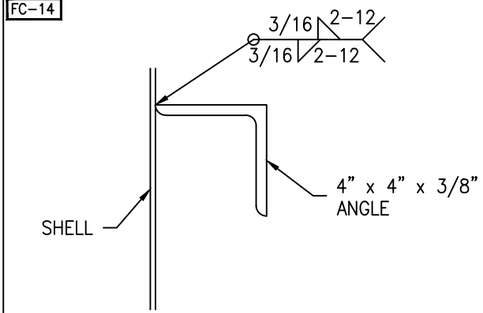

UPPER SHELL STIFFENER DETAIL

SCALE: 3" = 1'-0"

FC-14

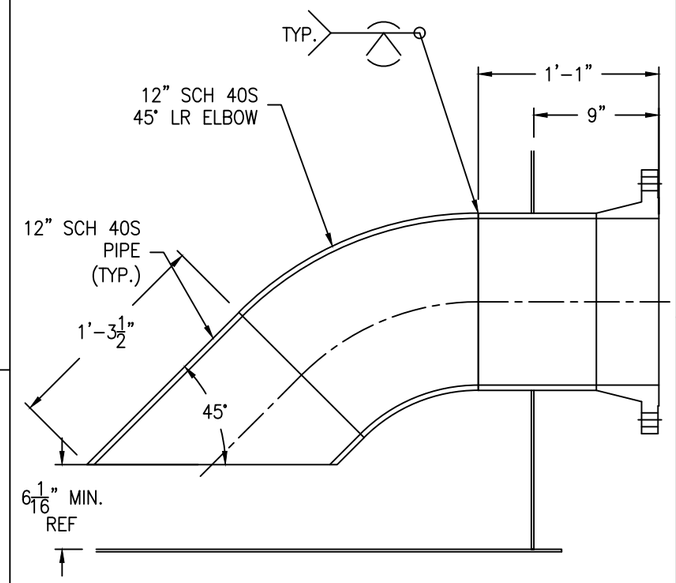

NOZZLE N2 DETAIL

SCALE: 1 1/2" = 1'-0"

FC-14

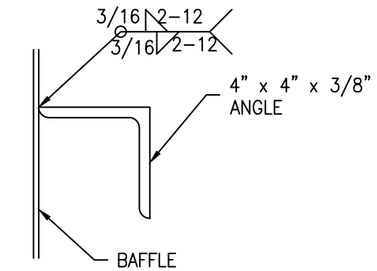

BAFFLE STIFFENER DETAIL

(3 REQ'D) SCALE: 3" = 1'-0"

FC-14

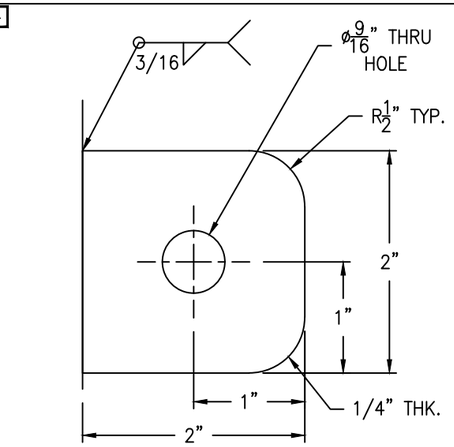

GROUND LUG DETAIL

(4 REQ'D) SCALE: 1'-0" = 1'-0"

FC-14

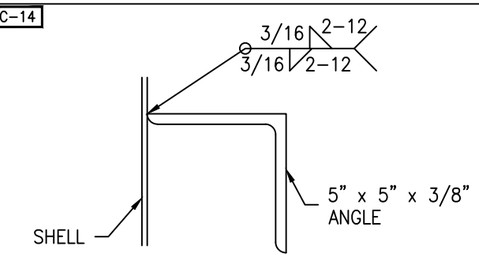

LOWER SHELL STIFFENER DETAIL

SCALE: 3" = 1'-0"

FC-14

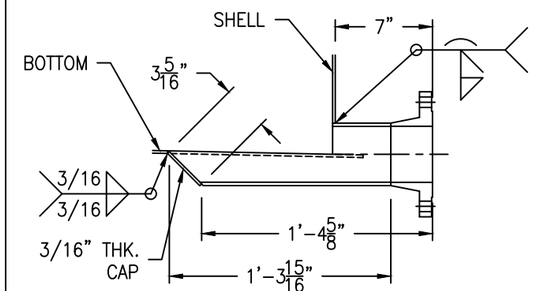

NOZZLE N4a & N4b DETAIL

SCALE: 1 1/2" = 1'-0"

FC-14

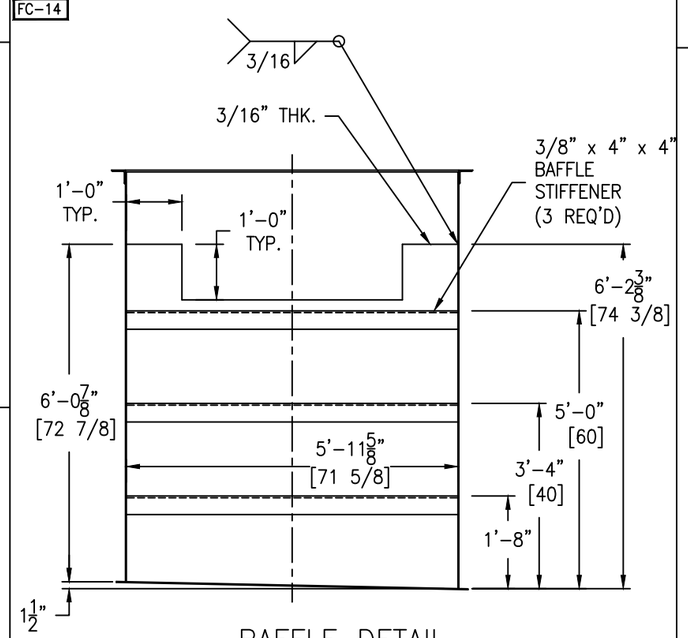

BAFFLE DETAIL

SCALE: 1/2" = 1'-0"

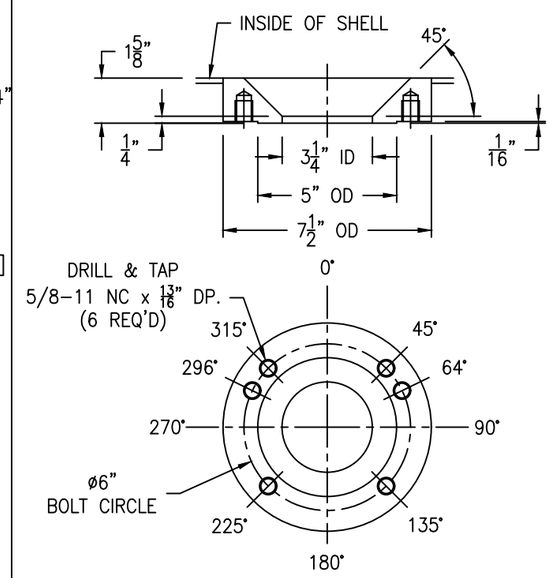

NOZZLE N3a & N3b DETAIL

SCALE: 6" = 1'-0"

FC-14

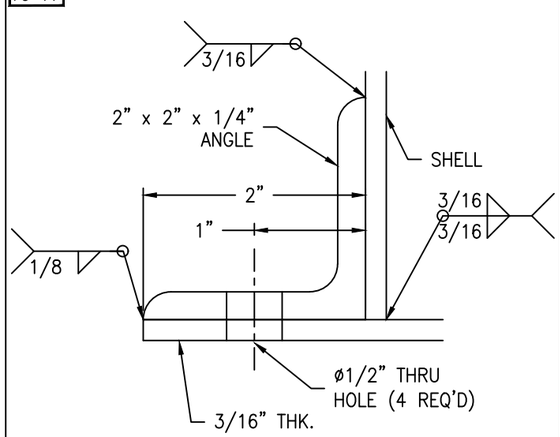

BOTTOM DETAIL

SCALE: 1'-0" = 1'-0"

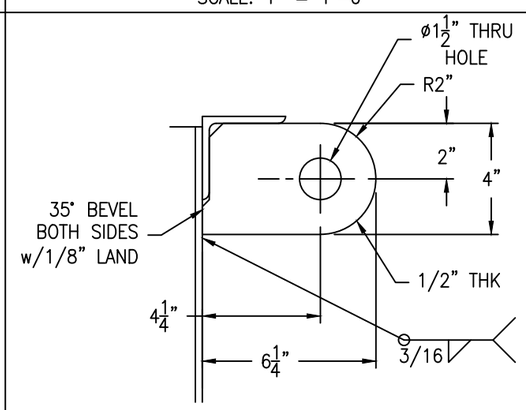

TANK WT. <= 5000#
SHACKLE PIN DIA. = 1"

LIFT LUG DETAIL

(4 REQ'D) SCALE: 6" = 1'-0"

IPC DWG NO.
010-1036-087

REV	D.BY	C.BY	DATE	DESCRIPTION
				AS BUILT
2	AD	–	5/22/25	CERTIFIED
1	RS	NP	4/10/25	APPROVAL REV 1
0	RS	AD	3/4/25	APPROVAL

1 REVISIONS

Savannah Tank & Equipment Corp.
1517 Telfair Road, Savannah, GA 31415
(912) 233-8902

DRAWN BY: RS
CHK'D BY: AD
APPROVED BY: NP
SCALE: 1/4" = 1'-0"

IRVING
FORMING SEAL PIT
EQUIP. #010-1036-TAN-002-00
CUST. PO #20615990

DRAWING NO.: 035-25-1 SHT 1 OF 2 REV. SET 2